Work Order ID 54421

December 9, 2009 10:03:46 AM

Item ID: D3183-5 **Accept** **Setup Start**

Revision ID: **Stop**

Item Name: Bearing

Start Date: 12/09/09 **Start Qty:** 10.00 **Cust Item ID:**

Required Date: 12/14/09 **Req'd Qty:** 10.00 **Customer:**

Reference:

Run Start

Approvals: **Process Plan:** CL **Date:** 09/12/09 **Tooling:** **Date:**

Stop

QC: **Date:** **SPC (Y/N):** **Date:**

Sequence ID/ Work Center ID	Operation Description	Set Up/ Run Hours	Draw Number	Draw Rev.	Plan Code	Accept Qty	Reject Qty	Reject Number	Insp. Stamp
Draw Nbr	**Revision Nbr**								
D3183	Rev C1								
100	PURCHASING	0.00							
Purchasing	**Memo**	0.00							
Purchasing	Issue P/O: 10924 □Bearing as per Dwg D3183□Single row, deep groove, Conrad type, shielded□Possible Supplier: NSK P/N 6800ZZ□Certificate of conformity note is required					CL	09/12/09	10	
110	Receive & Inspect for Damage & Mat'l Certs	0.00							
Packaging	**Memo**	0.00							
Packaging	Ensure certificate of confomity is attached						12/11	14	
120	QC6- Inspect dimensions to drawing	0.00							
QC	**Memo**	0.00							
Quality Control									

RBL 61800-ZZ
OK QP 10.15.20

Dart Aerospace Ltd

W/O:		WORK ORDER CHANGES					
DATE	STEP	PROCEDURE CHANGE	By	Date	Qty	Approval Chief Eng / Prod Mgr	Approval QC Inspector

Part No: _____ PAR #: _____ Fault Category: _____ NCR: Yes No DQA: _____ Date: _____

Resolution: _____ Disposition: _____ QA: N/C Closed: _____ Date: _____

NCR:		WORK ORDER NON-CONFORMANCE (NCR)						
DATE	STEP	Description of NC Section A	Corrective Action Section B			Verification Section C	Approval Chief Eng	Approval QC Inspector
			Initial Chief Eng	Action Description Chief Eng	Sign & Date			

NOTE: Date & initial all entries

H:\FORMS\Quality Assurance\approved QA\NCRWO RevE

Work Order ID 54421

December 9, 2009 10:03:46 AM

Item ID: D3183-5 **Accept** **Setup Start**

Revision ID: **Stop**

Item Name: Bearing

Start Date: 12/09/09 **Start Qty:** 10.00 **Cust Item ID:**

Required Date: 12/14/09 **Req'd Qty:** 10.00 **Customer:**

Reference:

Run Start

Approvals: **Process Plan:** _____ **Date:** _____ **Tooling:** _____ **Date:** _____

Stop

QC: _____ **Date:** _____ **SPC (Y/N):** _____ **Date:** _____

Sequence ID/ Work Center ID	Operation Description	Set Up/ Run Hours	Draw Number	Draw Rev.	Plan Code	Accept Qty	Reject Qty	Reject Number	Insp. Stamp
130	• Identify as per dwg & Stock Location: 236	0.00							
Packaging						10-5-25		160	
Packaging	**Memo**	0.00							
140	QC21- Final Inspection - Work Order Release	0.00					10/05/26		
QC	**Memo**	0.00							
Quality Control						CL10/5/26			

Dart Aerospace Ltd

W/O:		WORK ORDER CHANGES					
DATE	STEP	PROCEDURE CHANGE	By	Date	Qty	Approval Chief Eng / Prod Mgr	Approval QC Inspector

Part No: _____ PAR #: _____ Fault Category: _____ NCR: Yes No DQA: _____ Date: _____

Resolution: _____ Disposition: _____ QA: N/C Closed: _____ Date: _____

NCR:		WORK ORDER NON-CONFORMANCE (NCR)						
DATE	STEP	Description of NC Section A	Corrective Action Section B			Verification Section C	Approval Chief Eng	Approval QC Inspector
			Initial Chief Eng	Action Description Chief Eng	Sign & Date			

NOTE: Date & initial all entries

H:\FORMS\Quality Assurance\approved QA\NCRWO RevE

Picklist Print

December 9, 2009 10:03:46 AM

Work Order ID: 54421

Parent Item: D3183-5

Parent Item Name: Bearing

Comments:

Start Date: 12/09/09 **Required Date:** 12/14/09

Start Qty: 10.00 **Required Qty:** 10.00

Component Item ID/ Item Name	Replacement Item ID	Mfg/ Purch	Bin Item	Primary Location	Last Location	Route Seq ID	Unit of Measure	Qty on Hand	Remaining Qty To Pick	Qty Issued	Date Issued	Status
6800ZZ Bearing		Purchased	No			100	Each	0.0000	10.0000		12/12/11	(10)

Dart Aerospace Ltd

W/O:		WORK ORDER CHANGES					
DATE	STEP	PROCEDURE CHANGE	By	Date	Qty	Approval Chief Eng / Prod Mgr	Approval QC Inspector

Part No: _____ PAR #: _____ Fault Category: _____ NCR: Yes No DQA: _____ Date: _____

Resolution: _____ Disposition: _____ QA: N/C Closed: _____ Date: _____

NCR:		WORK ORDER NON-CONFORMANCE (NCR)						
DATE	STEP	Description of NC Section A	Corrective Action Section B			Verification Section C	Approval Chief Eng	Approval QC Inspector
			Initial Chief Eng	Action Description Chief Eng	Sign & Date			

NOTE: Date & initial all entries

H:\FORMS\Quality Assurance\approved QA\NCRWO RevE

DESIGN	DRAWN BY	DART AEROSPACE LTD HAWKESBURY, ONTARIO, CANADA	
CHECKED	APPROVED	DRAWING NO. D3183	REV. C SHEET 1 OF 4
DATE 04.02.17		TITLE BRACKET ASSEMBLY	SCALE 1:1

DART

COPY ISSUED

RELEASED 04.03.01

A	03.01.24	NEW ISSUE
B	03.06.17	REMOVE BEARING; 1.012 WS 0.882
C	04.02.17	ADD -045/-9; 0.182 WAS 0.431
C1	04.11.09	0.830 WAS 0.850

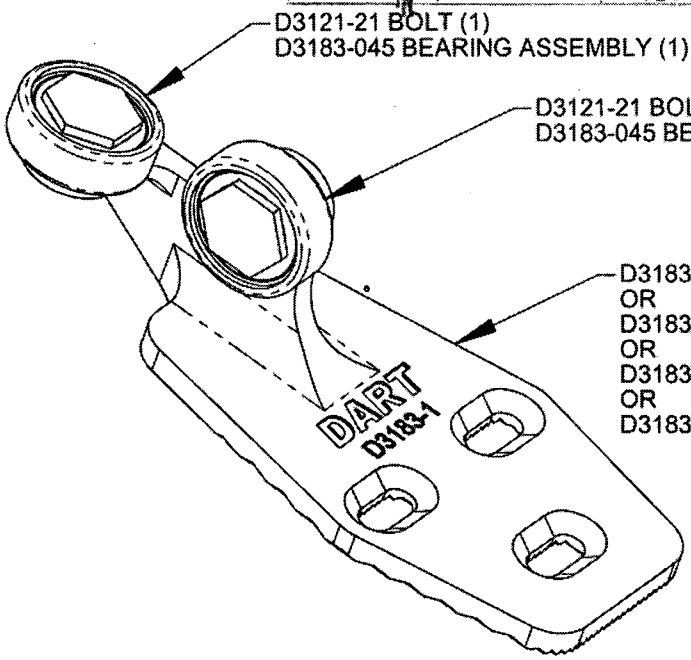

W/O: 54421
CL 09/12/09

D3183-041 BRACKET ASSEMBLY (SHOWN)
D3183-042 BRACKET ASSEMBLY (OPPOSITE)
D3183-043 BRACKET ASSEMBLY (SIMILAR)
D3183-044 BRACKET ASSEMBLY (SIMILAR)

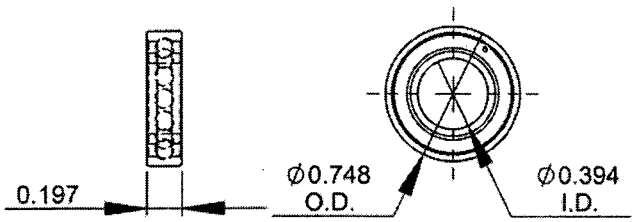

D3183-5 BEARING: SPECIFICATION CONTROL DRAWING

1) SINGLE ROW, DEEP GROOVE, CONRAD TYPE, SHIELDED
2) POSSIBLE SUPPLIER: NSK P/N 6800ZZ
3) ALL DIMENSIONS ARE IN INCHES

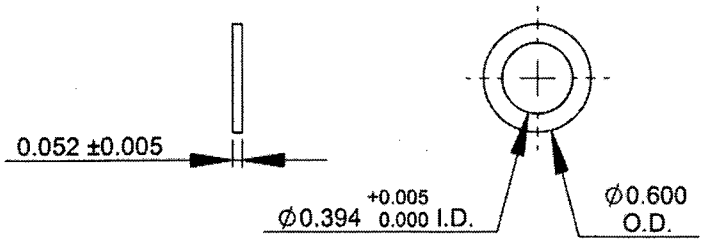

D3183-7 WASHER

1) MATERIAL: AISI 303 ROUND BAR (M303R) ANNEALED
2) BREAK ALL SHARP EDGES 0.005 TO 0.010
3) TOLERANCES ARE PER DART QSI 018 UNLESS OTHERWISE NOTED
4) ALL DIMENSIONS ARE IN INCHES

Dart Aerospace Ltd

W/O:		WORK ORDER CHANGES					
DATE	STEP	PROCEDURE CHANGE	By	Date	Qty	Approval Chief Eng / Prod Mgr	Approval QC Inspector

Part No: _____ **PAR #:** _____ **Fault Category:** _____ **NCR:** Yes No **DQA:** _____ **Date:** _____

Resolution: _____ **Disposition:** _____ **QA: N/C Closed:** _____ **Date:** _____

NCR:		WORK ORDER NON-CONFORMANCE (NCR)						
DATE	STEP	Description of NC Section A	Corrective Action Section B			Verification Section C	Approval Chief Eng	Approval QC Inspector
			Initial Chief Eng	Action Description Chief Eng	Sign & Date			

NOTE: Date & initial all entries

H:\fFORMS\Quality Assurance\approved QA\NCRWO RevE

MAIN INDUSTRIAL SALES LTD.

1475 TESSIER ST.
HAWKESBURY ON K6A 3S6
Phone: (613) 632-3595 Ext. Fax: (613) 632-0262
sales@mainindustrialsales.com

Packing Sli

DATE December 11, 2009
NUMBER 0000131113
CUSTOMER NO. DART

BILL TO:

DART AEROSPACE LTD.
1270 ABERDEEN ST.
HAWKESBURY ON K6A 1K7

(613) 632-3336 Ext.

SHIP TO:

DART AEROSPACE LTD.
1270 ABERDEEN ST.
HAWKESBURY ON K6A 1K7

(613) 632-3336 Ext.

P.O. NUMBER	SALESPERSON	ORDER DATE	REQ. DATE	ORDER NUM
PO10924	EB	10-Dec-09		000013111

F.O.B.	SHIP VIA	TERMS
F.O.B. value	PICK UP	NET 30 DAYS

PART NUMBER / DESCRIPTION	UOM	QUANTITY REQ.	SHIPPED	B.O
1-618002ZRBL BALL BEARING	EA	10	10	
1-619002ZRBL BALL BEARING	EA	10	10	

NSK TeC TECHNICAL SOURCE CENTER

NSK Bearing Cross-Reference

Click To Hide/Show Input Information:

Designation: 61800 zz

Search Option: Beginning

Manufacturer: Select All

FAFNIR
FAG
INA

Search (Enter) Clear (Esc)

Search Result For(61800) : Found 2.

Designation	Manufacturer	NSK		RHP		Basic Dimensions			Type/
		Designation	E/A	Designation	E/A	d	D	B or T	
61800	SKF	6800	E		A	10	19	5	Single
61800-2RS1	SKF	6800DD	E		A	10	19	5	Single